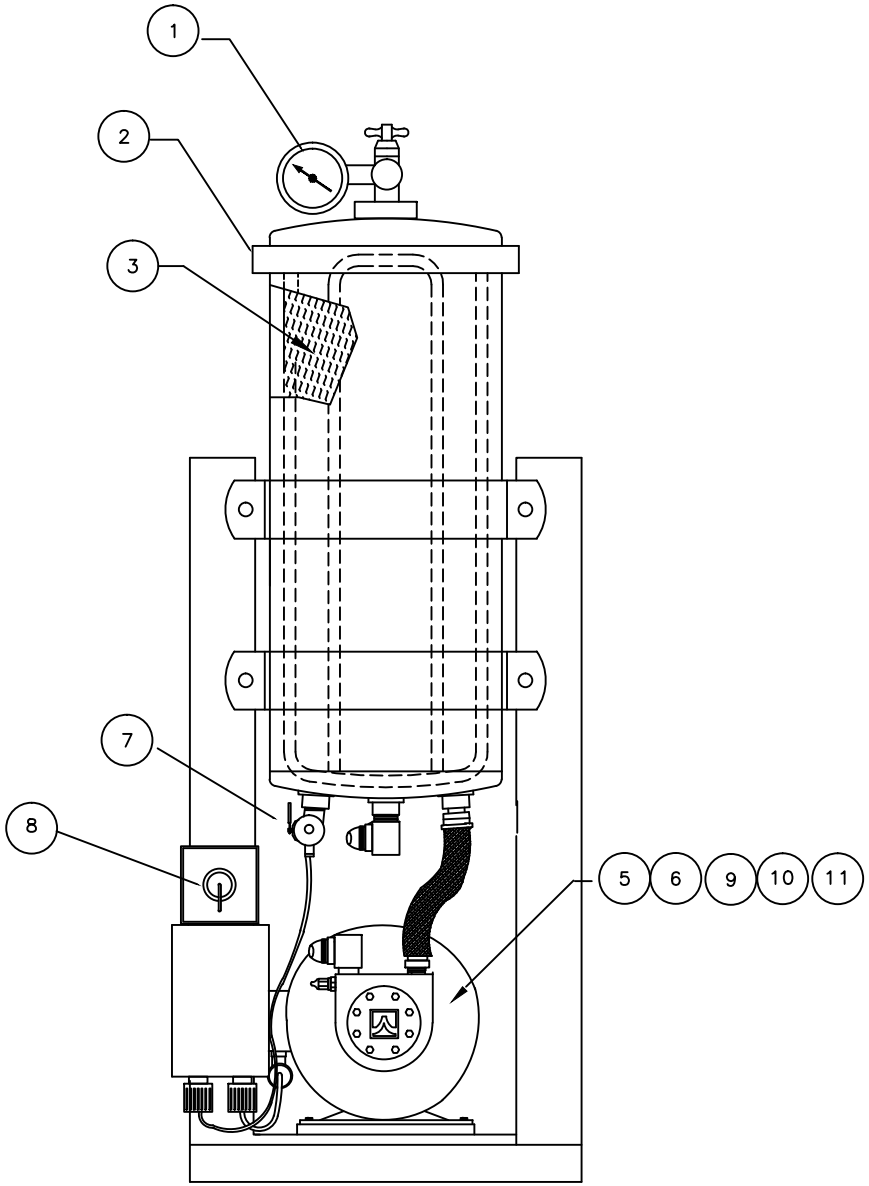

BILL OF MATERIAL

NO. REQD.	ITEM NO.	DESCRIPTION	PART NO
–	1	PRESSURE GAUGE	610–010
–	2	LID SEAL	450–002
–	3	B6Q ELEMENT	800–027
–	4	–	–
–	5	MOTOR 1/2 HP 120 VAC 60 HZ	780–013
–	6	PUMP	770–002
–	7	PRESSURE SWITCH (OPTIONAL)	620–001
–	8	START/STOP SWITCH	230–008
–	9	OPTIONAL WASH DOWN MOTOR	780–015
	10	MOTOR 3 PHASE	780–017
	11	MOTOR 1/2 HP 120 VAC 50 HZ	780–014

DWG. TITLE
HS410–C2–B6Q–A50, A60,A 3PH,

PROJECT DESCRIPTION
HYDRA–SUPREME GEAR BOX FILTER

JOB NO.	DRAWING NO.	REVISION	CUST. CONTR. NO.
–	810–015,24PL		–

HTI INC
11820 WESTERN AVE.
STANTON,
CA 90680

810–015, –024 PARTS LIST

REV.	DATE:	DRWN BY	CHKD BY	DESCRIPTION
0			SP	–

CUSTOMER
–